BAND REJECT FILTER

PREPARED BY RINJU RAVINDRAN, ADHOC ASST. PROFESSOR - ECE, GCEK

Band Reject Filter/ Band Stop/ Band Elimination Filter

- In this filter ckt, frequencies are attenuated in the stop band and passed outside this band.

(i) wide and

(ii) narrow band reject .

PREPARED BY RINJU RAVINDRAN, ADHOC ASST. PROFESSOR - ECE, GCEK

Wide Band Reject Filter

- Fig. (a) shows wide band reject filter circuit using a low pass filter, a high pass filter and a summing amplifier.
- **For a proper band reject response**,

i. the low cutoff frequency f_L of the high pass filter must be larger than the high cutoff frequency f_H of the low pass filter.

ii. Also, the pass band gain of both high pass and low pass sections must be equal.

PREPARED BY PINJU RAVINDRAN, ADHOC ASST. PROFESSOR - ECE, GCEK

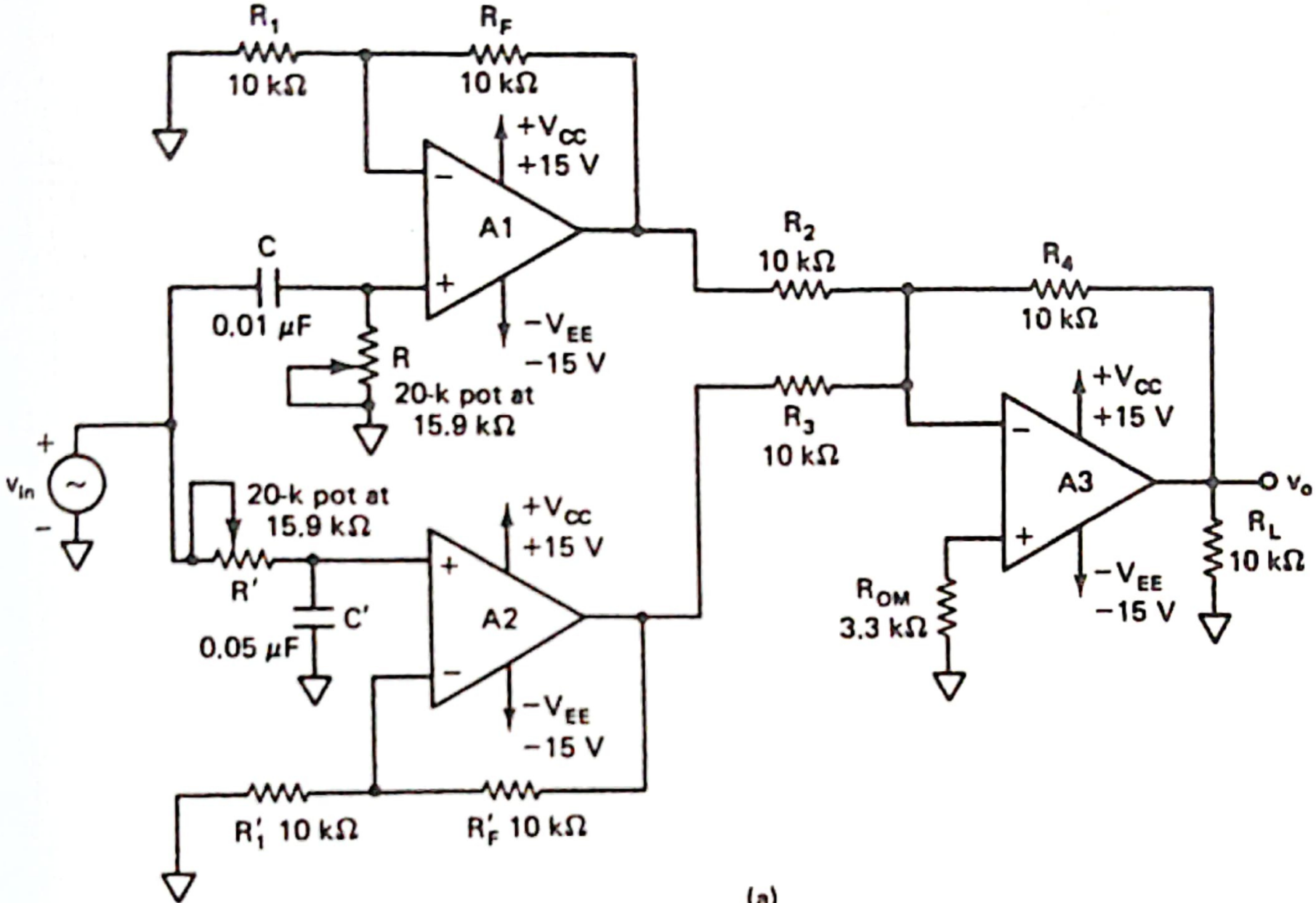
R1
10 kΩ
RF
10 kΩ
+Vcc
+15 V
A1
C
0.01 μF
R
20-k pot at
15.9 kΩ
−VEE
−15 V
R2
10 kΩ
R4
10 kΩ
R3
10 kΩ
+Vcc
+15 V
A3
vo
RL
10 kΩ
ROM
3.3 kΩ
−VEE
−15 V
vin
20-k pot at
15.9 kΩ
R′
C′
0.05 μF
+Vcc
+15 V
A2
−VEE
−15 V
R′1 10 kΩ
R′F 10 kΩ

(a)

SSOR -

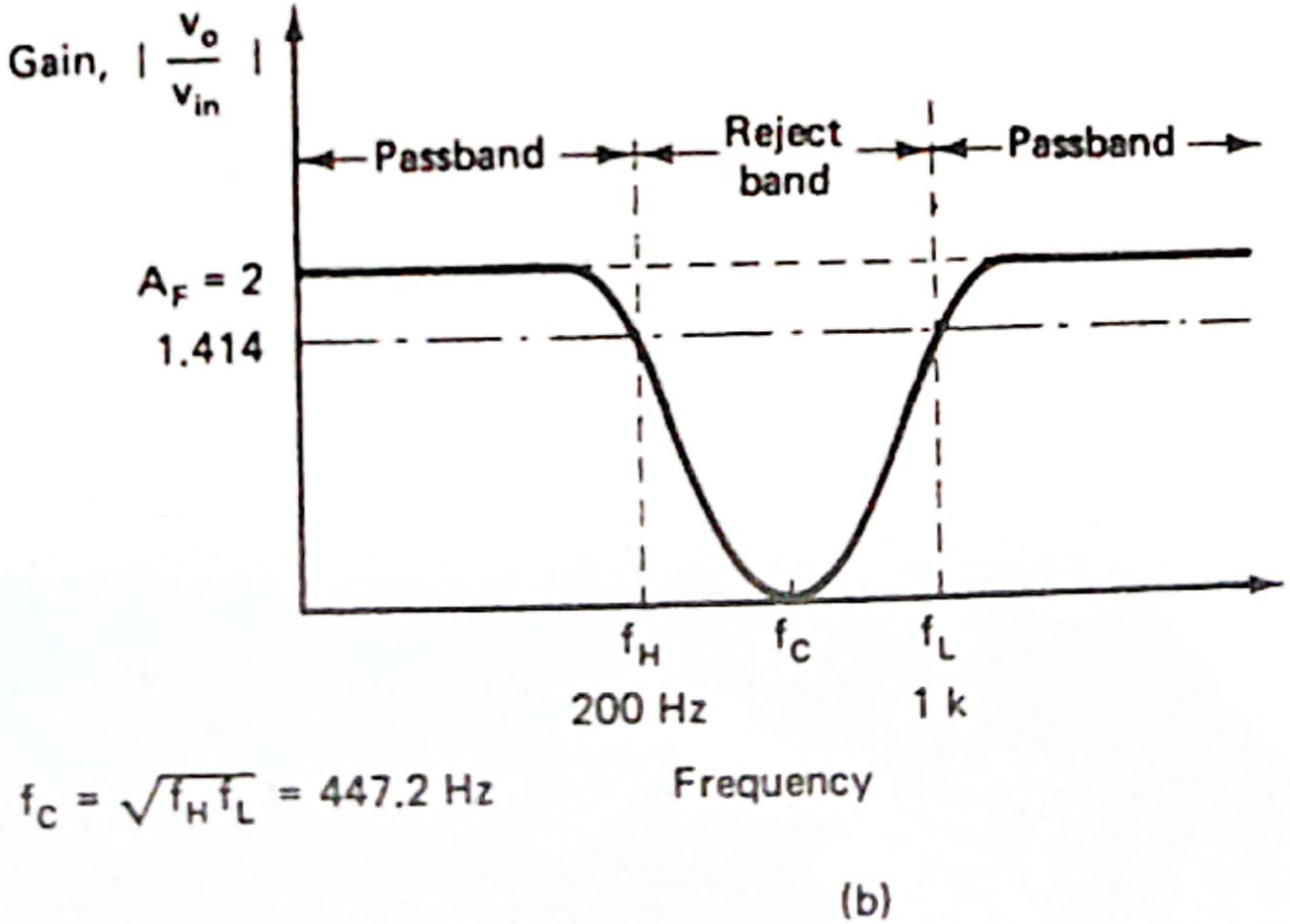

FIGURE 7–14 Wide band-reject filter. (a) Circuit. (b) Frequency response.

1. Design a wide band reject filter having f_H = 200Hz and f_L = 1 KHz.

PREPARED BY RINJU RAVINDRAN, ADHOC ASST. PROFESSOR - ECE, GCEK

SOLUTION

In Example 7–7, a wide band-pass filter was designed with $f_L = 200$ Hz and $f_H = 1$ kHz. In this example these band frequencies are interchanged, that is, $f_L = 1$ kHz and $f_H = 200$ Hz. This means that we can use the same components as in Example 7–7, but interchanged between high-pass and low-pass sections. Therefore, for the low-pass section, $R' = 15.9\ \text{k}\Omega$ and $C' = 0.05\ \mu\text{F}$, while for the high-pass section

$$R = 15.9\ \text{k}\Omega \text{ and } C = 0.01\ \mu\text{F}$$

Since there is no restriction on the passband gain, use a gain of 2 for each section. Hence let

$$R_1 = R_F = R_1' = R_F' = 10\ \text{k}\Omega$$

PREPA
ECE, GCEK

Furthermore, the gain of the summing amplifier is set at 1; therefore,

$$R_2 = R_3 = R_4 = 10\ \text{k}\Omega$$

Finally, the value of $R_{OM} = R_2 \| R_3 \| R_4 \cong 3.3\ \text{k}\Omega$.

The complete circuit is shown in Figure 7–14(a), and its response is shown in Figure 7–14(b). The voltage gain changes at the rate of 20 dB/decade above f_H and below f_L, with a maximum attenuation occurring at f_C.

PREPARED BY RINJU
ECE, GCEK

Example 7.7

Design a wide band reject filter having f_h = 400 Hz and f_l = 2 kHz having pass band gain as 2.

Solution

For HPF, f_l = 2 kHz = 1/2 $\pi R_2 C_2$. Letting C_2 = 0.1 μF gives R_2 = 795 Ω (≈ 800 Ω). Again $A_o = A_{o2} = 2 = (1 + R_F/R_i)$ gives $R_F = R_i$ = 10 kΩ (say). For LPF, f_h = 400 Hz = 1/2 $\pi R_1 C_1$. Letting C_1 = 0.1 μF gives R_1 = 3978 Ω (choose 4 kΩ). Further $A_o = A_{o1} = 2 = (1 + R_F/R_i)$ gives $R_i = R_F$ = 10 kΩ (say). The schematic arrangement and the frequency response is shown in Figs. 7.16 (a, b).

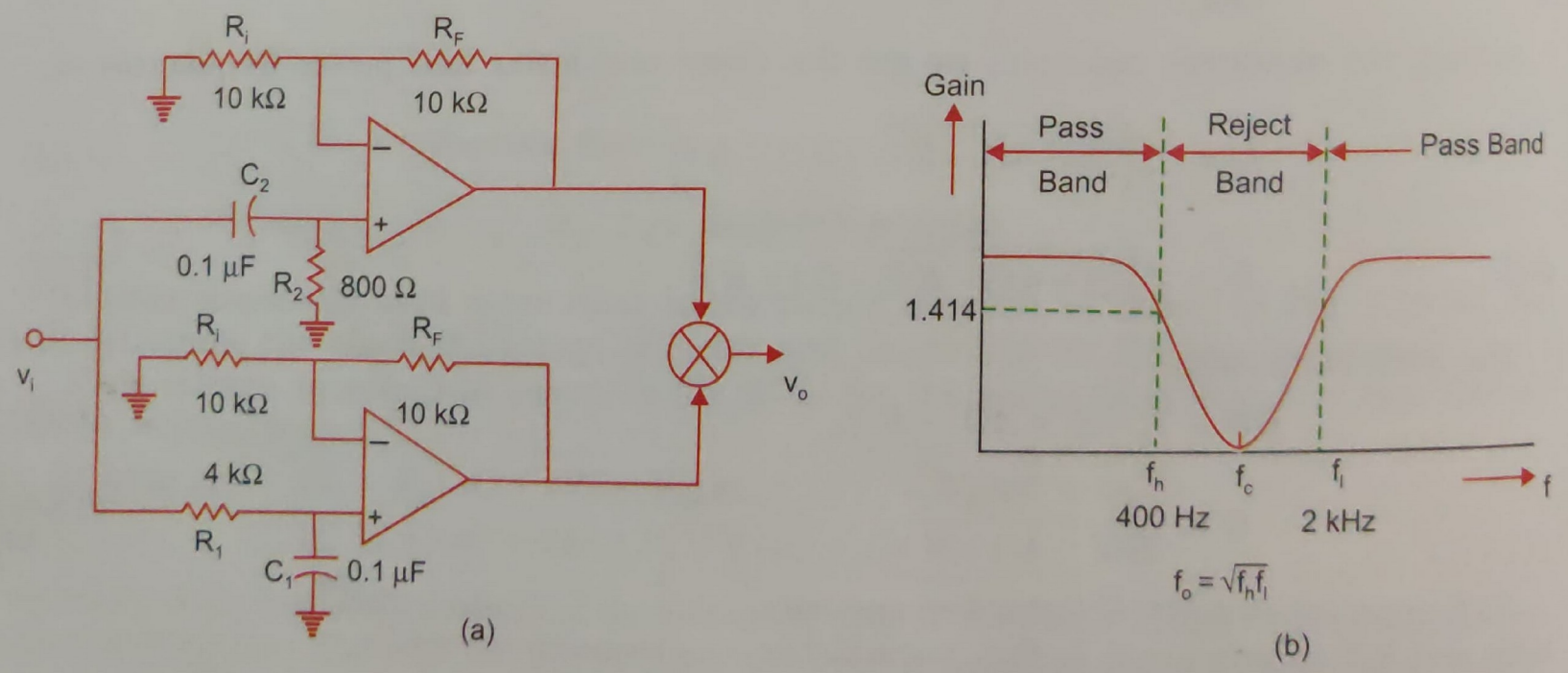

Fig. 7.16 (a) Wide band-reject filter (b) Frequency response

PREPA
ECE,
OR -

Narrow Band Reject Filter

- Also called the **notch filter**.
- commonly used for the attenuation of a single frequency.
- For eg:, it may be necessary to attenuate 60 Hz or 400 Hz noise or hum signals in a circuit.

PREPARED BY RINJU RAVENDRAN, ADHOC ASST. PROFESSOR - ECE, GCEK

There are several ways to make notch filters one simple technique is to subtract the band pass filter output from its input. This principle is shown in figure below.

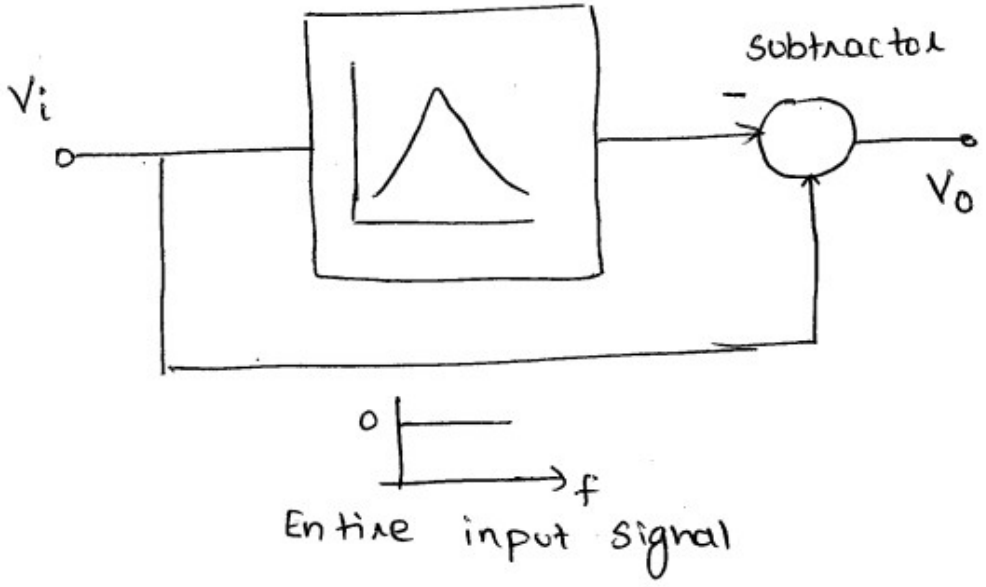

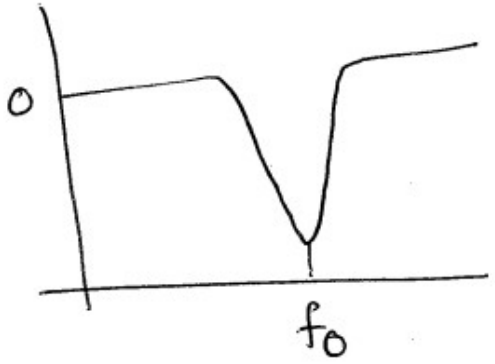

Notch Response.

The band pass filter has an inverted output as the gain is negative. Therefore while implementing the notch filter, we must use a summer

PROFESSOR -

instead of a subtractor. Also the band pass filter has a gain of A_0, so that output at the centre frequency will be $-A_0V_i$. To completely subtract this output, the input of the summer must be precisely A_0V_i. Thus a gain of A_0 must be added between the input signal and the summer as shown in figure below.

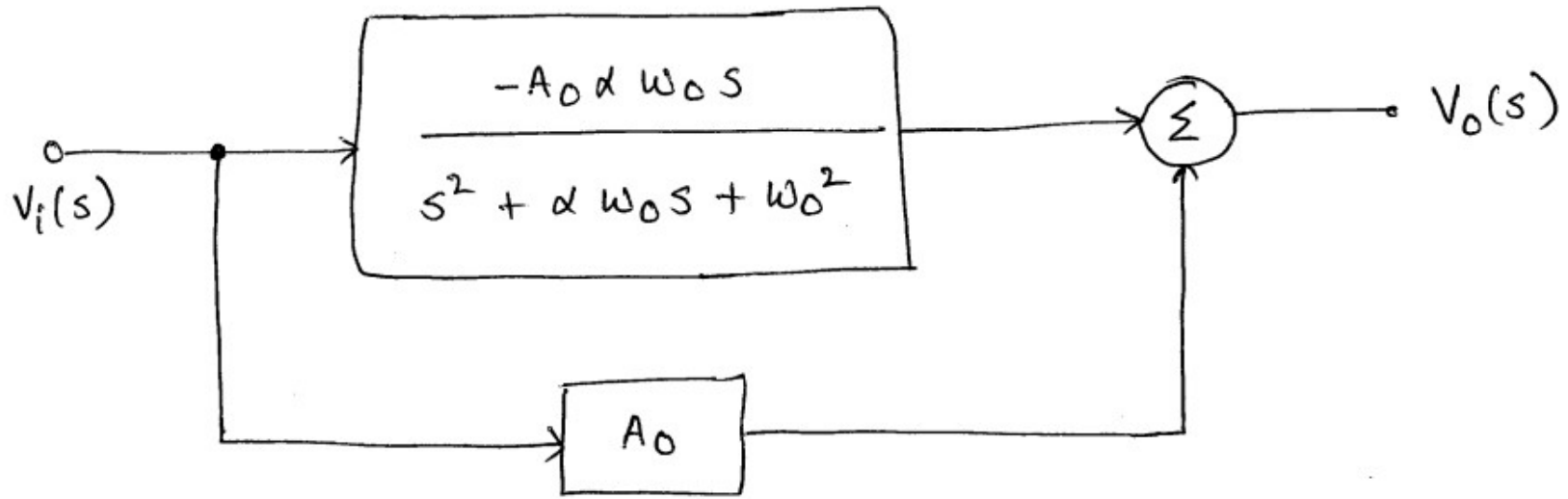

PREP
ECE

the output of the circuit in the s-domain is

$$V_o(s) = A_o V_i(s) + \left[\frac{-A_o \alpha \omega_o s \; V_i(s)}{s^2 + \alpha \omega_o s + \omega_o^2} \right]$$

$$\frac{V_o(s)}{V_i(s)} = A_o - \frac{A_o \alpha \omega_o s}{s^2 + \alpha \omega_o s + \omega_o^2}$$

$$\frac{V_o(s)}{V_i(s)} = A_o \left[1 - \frac{\alpha \omega_o s}{s^2 + \alpha \omega_o s + \omega_o^2} \right]$$

$$\frac{V_o(s)}{V_i(s)} = \frac{A_o (s^2 + \omega_o^2)}{s^2 + \alpha \omega_o s + \omega_o^2} \longrightarrow (1)$$

PR
E

This is the transfer function for a second order notch filter and the circuit schematic is shown below.

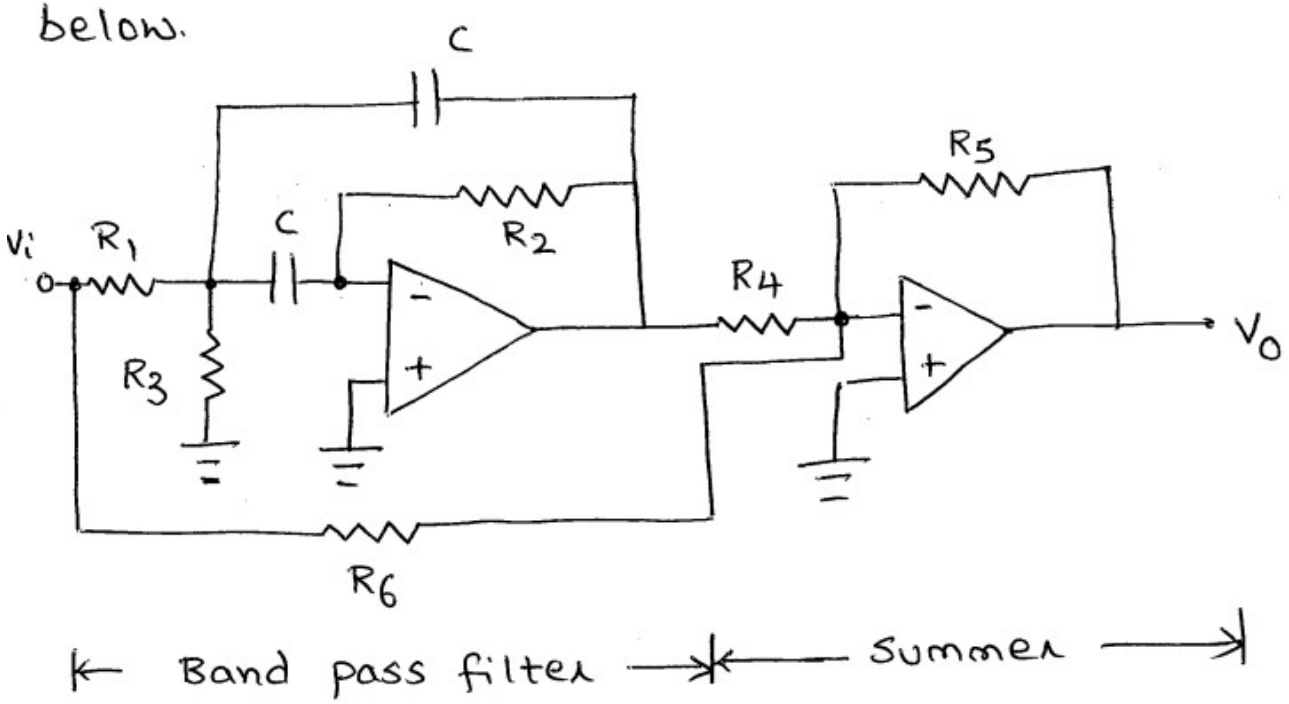

Fig: Notch filter schematic

It is evident from Eq ① that for $\omega << \omega_0$ and for $\omega >> \omega_0$, the pass band gain is $|A_0|$ and at frequency $\omega = \omega_0$ the gain is zero.

PREP
ECE
FESSOR -

- Another commonly used notch filter is the **twin-T network** as shown in Fig.
- One T network is made up of two resistors and a capacitor, while the other is made of two capacitors and a resistor.
- We will determine the notch frequency, Q factor and bandwidth for this configuration.

PREPARED BY RINJU RAVINDRAN, ADHOC ASST. PROFESSOR
ECE, GCEK

- The frequency at which maximum attenuation occurs is called the notch-out frequency, given by

$$f_N = \frac{1}{2\pi RC}$$

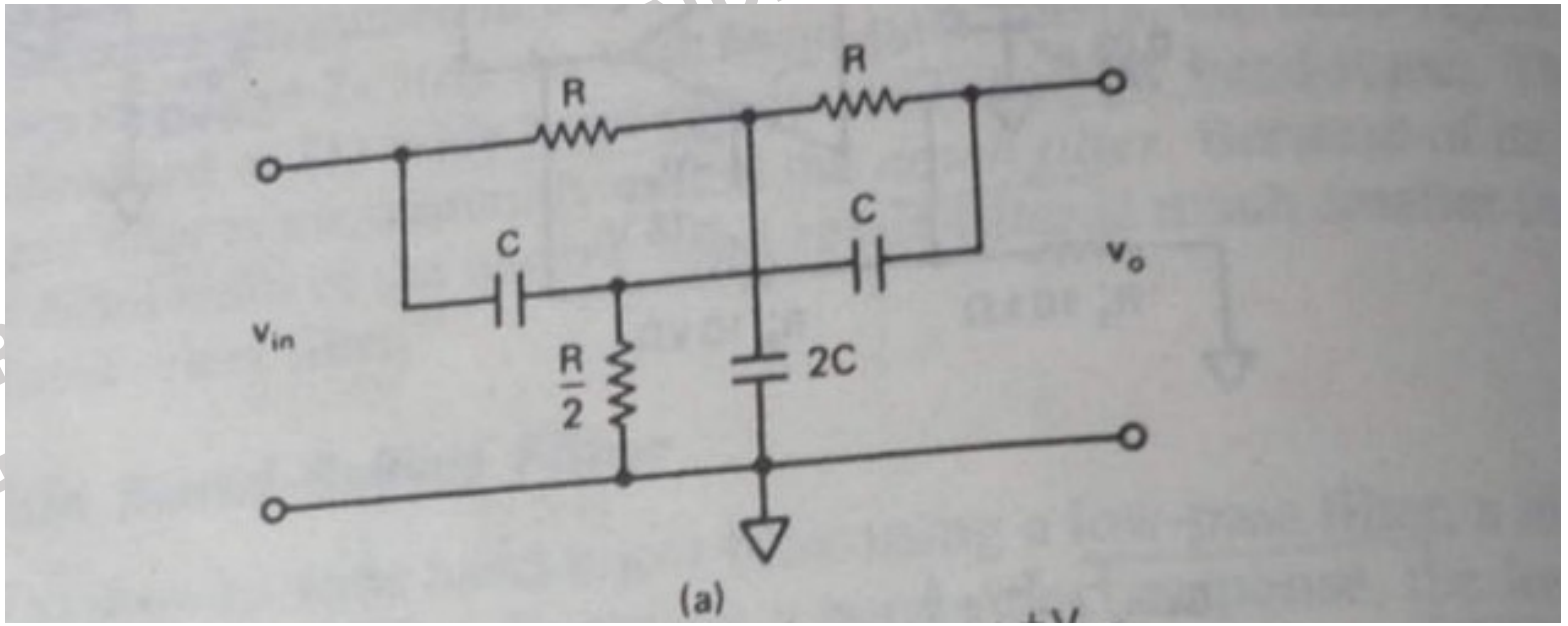

PREPAR
ECE, G
T. PROFESSOR-

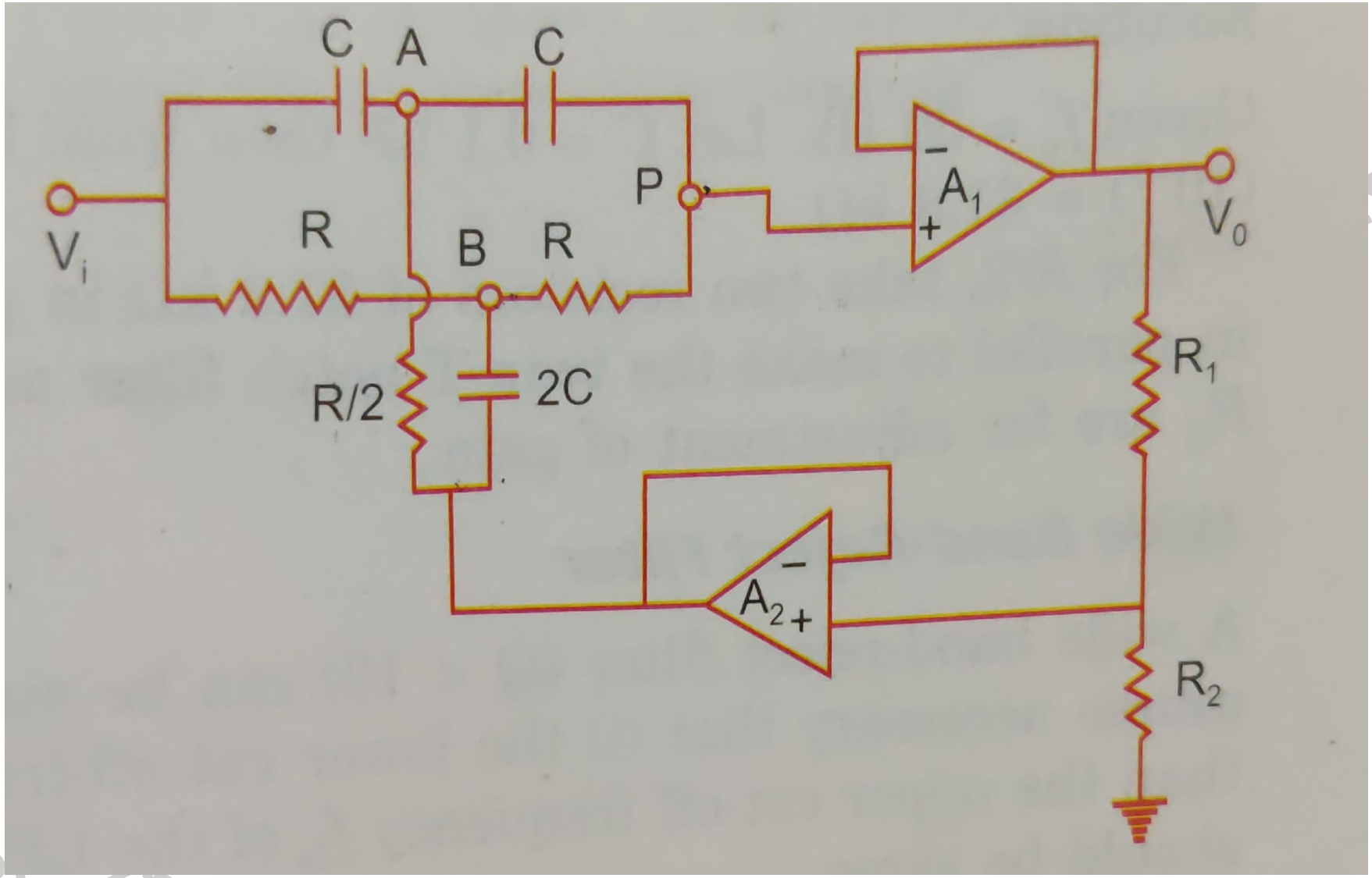

PREPA
ECE, GCEK

SSOR -

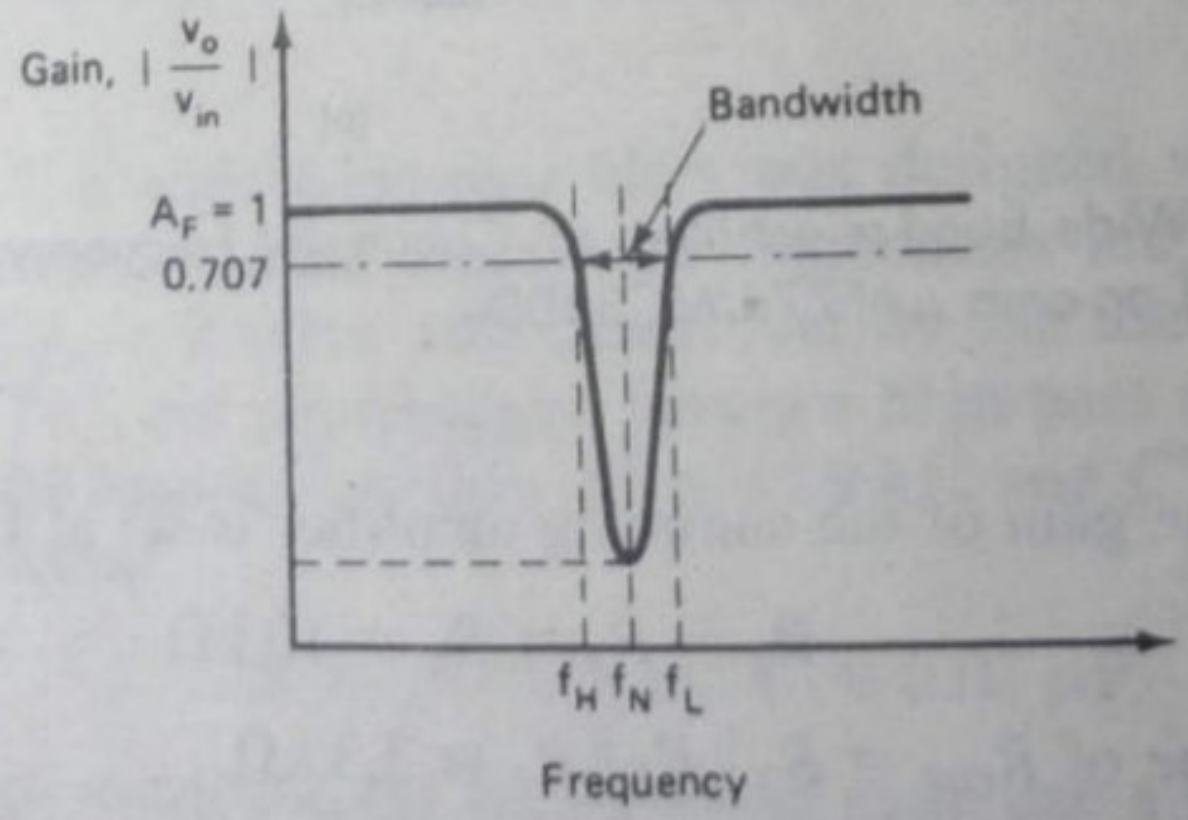

(c)

FIGURE 7–15 (a) Twin-T notch filter. (b) Active notch filter. (c) Frequency response of the active notch filter.

- From freq response it is clear that ckt reject freq around with max attenuation while passes all other freqs with max pass band gain.
- The Notch filters are used in communications, biomedical instruments, etc. where the elimination of certain frequencies is necessary.

PREPARED BY RINJU RAVINDRAN, ADHOC ASST. PROFESSOR - ECE, GCEK

- The T-networks provide alternative forward paths through which V_i can reach the amplifier's input:
  a) the low-frequency path R-R and
  b) the high-frequency path C-C.

- At low frequencies, reactance offered by capacitor's is high, $\left(X_C = \frac{1}{2\pi f C}\right)$ capacitors behaves as open-ckt, input V_i reaches amplifier input via R-R.

- At high frequencies, reactance offered by capacitor's becomes low, capacitors behaves as short-ckt, input V_i reaches amplifier input via C-C.

- At intermediate frequencies, the two paths provide opposing phase angles, indicating a tendency of the two forward signals to cancel each other out at the amplifiers input.

PREPARE
ECE, GC
. PROFESSOR -

- One disadvantage of the passive twin T network is that it has a relatively low figure of merit, Q.
- Higher the value of Q, the more selective is the filter. Therefore, to increase the Q of the twin T network significantly, it should be used with a voltage follower, as shown in Fig.(b)
- Fig (c) shows the frequency response of a notch filter.

Design

- To design an active notch filter for a specific notch out freq f_N , choose value of C.
- $= f_0 =$
- Then calculate R =
- Notch freq
- Q=

PREPARED BY RINJU RAVINDRAN, ADHOC ASST. PROFESSOR - ECE, GCEK

DERIVATION

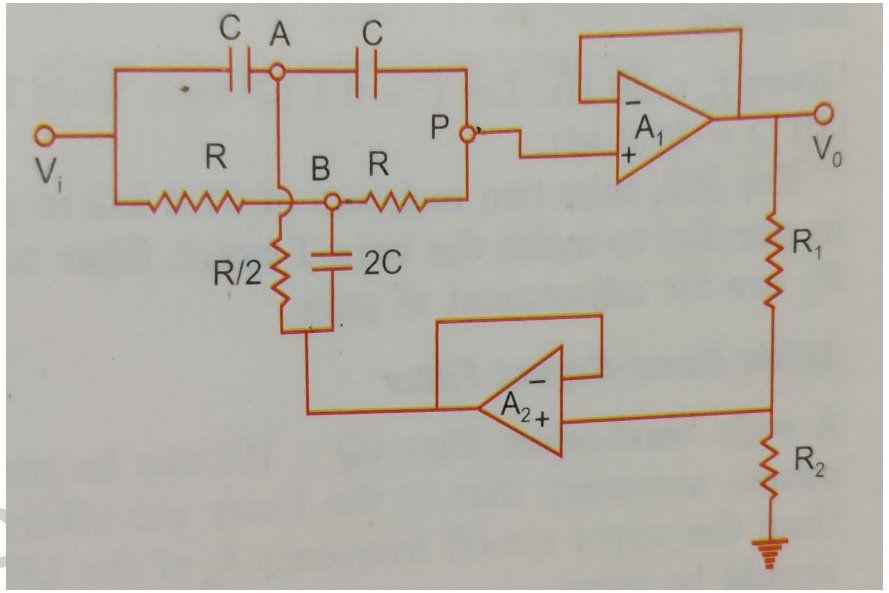

- Node voltage equations in s-domain (by

Let **K =**

G =

- At node A

$$(V_i - V_A)\, sC + (V_o - V_A)\, sC + (KV_o - V_A)\, 2G = 0$$

$$sC\, V_i + (sC + 2KG)V_0 = 2(sC + G)V_A \quad \text{------(1)}$$

PREPARED BY RINJU RAVINDRAN, ADHO
ECE, CCEK

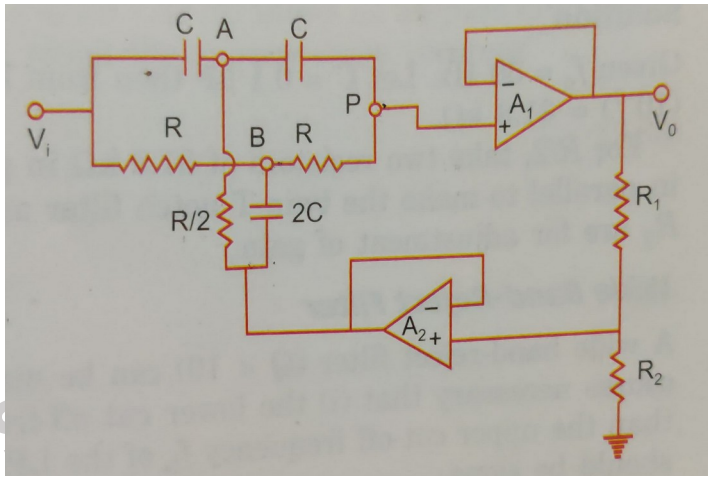

- At node B

$$(V_i - V_B)\,G + (V_o - V_B)\,G + 2(KV_o - V_B)\,sC$$

$$G\,V_i + (G+2KsC)V_0 = 2(G+sC)V_B \text{ ----------(2)}$$

- At node P

$$(V_A - V_o)\,sC + (V_B - V_o)\,G = 0$$

$$sC\,V_A + G\,V_B = (G+sC)\,V_o \text{ -------- (3)}$$

PREPARED BY RINJU RAVINDRAN, ADHOC ASS
ECE, GCEK

From eqn ①,

$$V_A = \left[\frac{sCV_i + (sC + 2kG)V_o}{2(sC+G)}\right] \rightarrow ④$$

From eqn ②,

$$V_B = \left[\frac{GV_i + (G + 2KsC)V_o}{2(sC+G)}\right] \rightarrow ⑤$$

Substitute ④ & ⑤ in ③ and solve for $\left(\frac{V_o}{V_i}\right)$.

PREF
ECF
FESSOR -

$$H(s)=\frac{V_o}{V_i}=\frac{G_2+s_2C_2}{G_2+s_2C_2+4(1-K)sCG}$$

----------(6)

PREPARED BY RINJU RAVINDRAN, ADHOC ASST. PROFESSOR - ECE, GCEK

$$H(s) = \frac{G^2 + s^2 C^2}{G^2 + s^2 C^2 + 4(1-K)sCG} \rightarrow (6)$$

$$= \frac{s^2 + (G/C)^2}{s^2 + (G/C)^2 + 4(1-K)\, s\,(G/C)}$$

In steady state, (ie, $s = j\omega$)

$$H(j\omega) = \frac{\omega^2 - \omega_0^2}{\omega^2 - \omega_0^2 - j4(1-K)\omega\omega_0} \rightarrow (7)$$

ESSOR -

where $\omega_0 = \left(G/C\right) = 1/RC$

$$f_0 = \frac{1}{2\pi RC}$$

(7) $\Rightarrow H(j\omega) = 0$ for $\omega = \omega_0$

approaches unity as $\omega << \omega_0$

& $\omega >> \omega_0$.

At 3 dB pts., $|H| = \frac{1}{\sqrt{2}}$

PREPAR
ECE, G

ESSOR -

$$|H| = \frac{\omega^2 - \omega_0^2}{\sqrt{(\omega^2-\omega_0^2)^2 + (4(1-K)\omega\omega_0)^2}}$$

$$\frac{1}{\sqrt{2}} = \frac{1}{\sqrt{1 + \frac{(4(1-K)\omega\omega_0)^2}{(\omega^2-\omega_0^2)^2}}}$$

$$\Rightarrow \omega^2 - \omega_0^2 = \pm 4(1-K)\omega\omega_0$$

$$(\omega/\omega_0)^2 \pm 4(1-K)(\omega/\omega_0) - 1 = 0.$$

PREPAR
ECE, G
ROFESSOR -

$$ax^2 + bx + c = 0$$

$$x = \frac{-b \pm \sqrt{b^2 - 4ac}}{2a}$$

Comparing $a = \frac{1}{\omega_0^2}$.

$$b = \pm \frac{4(1-K)}{\omega_0}$$

$$c = -1$$

PREPARED BY ASST. PROFESSOR - ECE, GCEK

Solving the quadratic eqn, we get upper & lower half power freq's

$$f_h = f_0\left[\sqrt{1+4(1-K)^2} + 2(1-K)\right]$$

$$f_L = f_0\left[\sqrt{1+4(1-K)^2} - 2(1-K)\right]$$

3 dB Bandwidth,

$$BW = f_h - f_L$$

$$BW = 4(1-K)f_0$$

$$Q = \frac{f_0}{BW} = \frac{1}{4(1-K)}$$

PREPAR
ECE, G

ST. PROFESSOR -

- As K approaches unity, Q factor becomes very large and BW approaches 0.

PREPARED BY RINJU RAVINDRAN, ADHOC ASST. PROFESSOR - ECE, GCEK

1. Design a 60Hz active notch filter.

PREPARED BY RINJU RAVINDRAN, ADHOC ASST. PROFESSOR - ECE, GCEK

SOLUTION

Let $C = 0.068\ \mu F$. Then, from Equation (7–16), the value of R is

$$R = \frac{1}{2\pi f_N C} = \frac{1}{(2\pi)(60)(68)(10^{-9})} = 39.01\ k\Omega$$

(Use 39 kΩ.) For $R/2$, parallel two 39-kΩ resistors; for the $2C$ component, parallel two 0.068-μF capacitors.

PREPARED BY
ECE, GCEK

Second Order Filter Characteristics

2nd Order Filters	
Filter Type	**Transfer Function**
Low Pass	$H_{LP}(s) = \dfrac{H_{0LP}\omega_0^2}{s^2 + s\dfrac{\omega_0}{Q} + \omega_0^2}$
High Pass	$H_{HP}(s) = \dfrac{H_{0HP}s^2}{s^2 + s\dfrac{\omega_0}{Q} + \omega_0^2}$
Band Pass	$H_{BP}(s) = \dfrac{H_{0BP}\dfrac{\omega_0}{Q}s}{s^2 + s\dfrac{\omega_0}{Q} + \omega_0^2}$
Notch (Band Reject)	$H_N(s) = \dfrac{H_{0N}\left(\omega_0^2 + s^2\right)}{s^2 + s\dfrac{\omega_0}{Q} + \omega_0^2}$

Here

PRE
ECE, GCE